2.0x1.6 SMD OSCILLATOR (Programmable)

FEATURE

- 0.6 MHz to 200 MHz
- CMOS compatible logic levels.
- Pin-compatible with standard 2.0×1.6mm packages.
- PLL technology to enable short lead time.
- Pb-free and RoHS/Green compliant.

APPLICATIONS

- Ideally suited designed for use in Computer Peripherals, Set-top Box, HDTV DSC, PDA, Portable Applications.

•Electrical Specifications 电气参数

型号	Holder Type	2.0x1.6mm SMD OSCILLATOR(Programmable)
频率范围	Frequency Range	0.6Mhz to 200 MHz
总频差	Frequency Stability	±15ppm to ±50ppm
输入电压	Supply Voltage	1.8V to 3.3V
工作温度范围	Operating Temperature Range	-20˚C - +70˚C / -40˚C - +85˚C
储存温度范围	Storage Temperature Range	-40˚C - +85˚C/-55˚C - +125˚C
占空比	Symmetry (Duty Cycle)	45/55 Standard
输出	Output Load	15pF Hcmos
消耗电流	Current Consumption (15pf only)	
	3.3V	35 mA max
	2.5V	30 mA max
	1.8V	20 mA max
上升/下降时间	Rise/Fall Time	3 nS max

•Mechanical Dimensions 外型尺寸

UNIT(单位):mm(毫米)

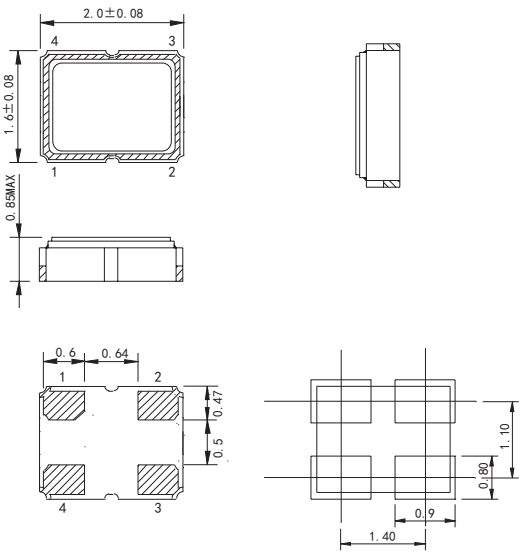

suggested solder pad layout

PIN	FUNCTION
1	Tri-state※(See Notes)
2	Ground
3	Output
4	Vdd

•Test Circuit(测试电路)

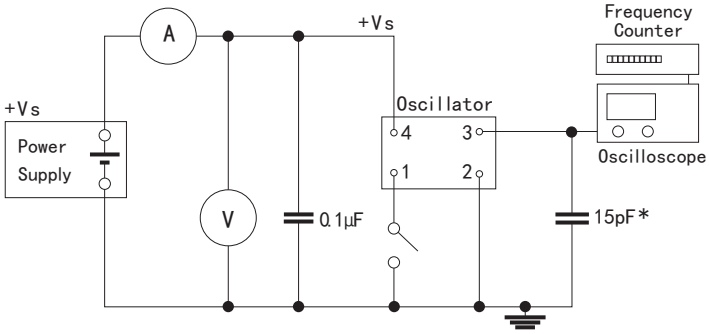

※Notes:

Tri-state: PIN 1 connected to Vdd or floating, the product is working properly;connected to GND,stops working.

SCTF
The above specifications are standard for SCTF product
If you have special requirement please Contact SCTF sales with your enquiries
Tel:0086-0755-86097430, 0086-0755-86097250
Fax:0086-0755-86097259
E-mail:sales@sctf-crystal.com http://www.sctf-crystal.com